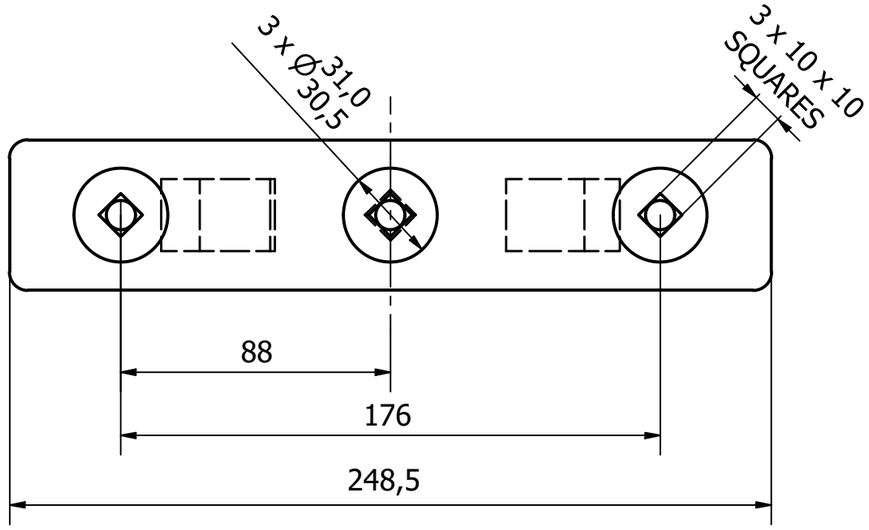

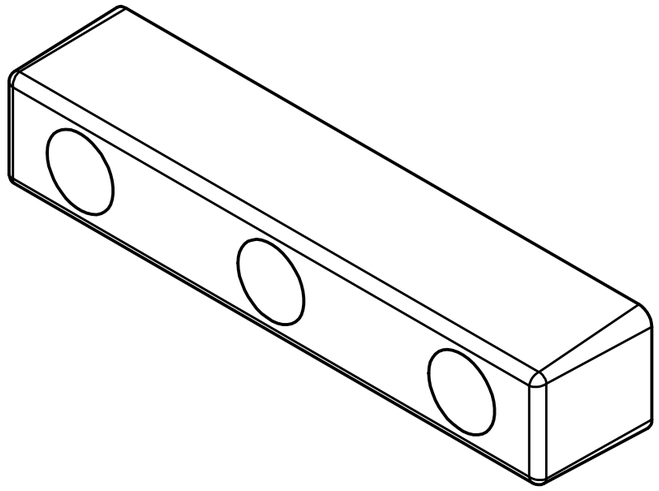

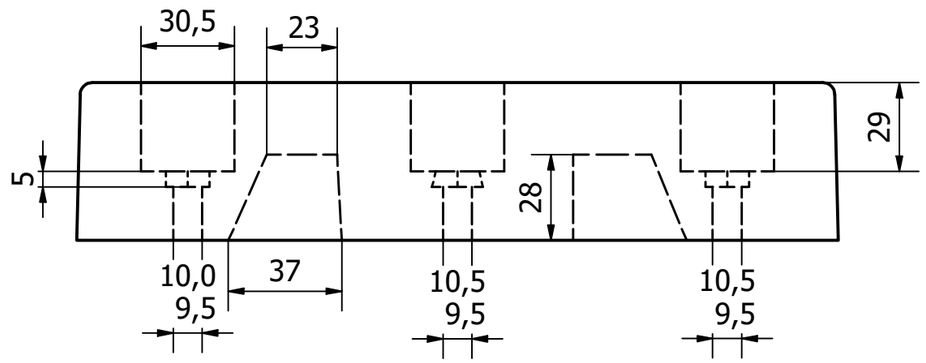

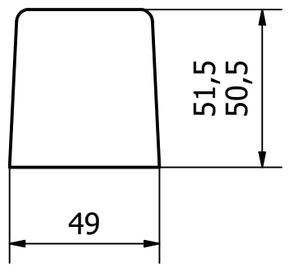

REV	DESCRIPTION	DATE	APPROVED
1	VALIDATION COMPLETE	04/03/21	U.F

GENERAL TOLERANCES ON LENGTHS

0.5 - 6 ± 0.1mm
6 - 30 ± 0.2mm
30 - 120 ± 0.3mm
120 - 400 ± 0.5mm
400 - 1000 ± 0.8mm
1000 - 2000 ± 1.2mm
2000 - 4000 ± 2.0mm

ALBERT JAGGER LTD
GREEN LANE
WALSALL PHONE: 01922 471000
WEST MIDLANDS FAX: 01922 648021
WS2 8HG

THIS DRAWING & THE DESIGN SHOWN ARE THE PROPERTY OF ALBERT JAGGER LTD AND MUST NOT BE USED OR COPIED BY A THIRD PARTY WITHOUT PERMISSION

DRAWN BY	CHECKED BY		SCALE	MATERIAL	MASS	FINISH	Date		
K.M	A.P	THIRD ANGLE PROJECTION	1 : 2	SYNTHETIC RUBBER	0.447 kg	BLACK	20/01/2021	ALL DIMS IN MM UNLESS STATED DO NOT SCALE	A3

albert Jagger

MEDIUM DUTY RUBBER BUFFER

2503-003	Edition 1	Sheet 1 / 1