PART NUMBER	ITEM 1 HOUSING (QTY)	ITEM 2 PADDLE (QTY)	ITEM 3 BUSHING (QTY)	ITEM 4 BUSHING (QTY)	ITEM 5 AXLE (QTY)	ITEM 6 ARM (QTY)	ITEM 7 SPRING (QTY)	ITEM 8 PLT ASSY (QTY)	ITEM 9 BUMPER (QTY)	ITEM 10 WASHER (QTY)	ITEM 11 RIVET (QTY)	ITEM 12 WASHER (QTY)	ITEM 13 PIVOT (QTY)	ITEM 14 LKCYL (QTY)	ITEM 15 LK PAWL (QTY)	ITEM 16 KNOB (QTY)	FINISH 4 (19)	KEYS SUPPLIED YES/NO (QTY) (21)	PART MARKING 1 (23)(24) (19)
12220-01 (24)	13026-07 (1)	12573-12 (1)	80797 (1) (24)	80796 (1) (24)	10989-16 (1)	80652-15 (1)	80528-57 (1)	11301-04 (1)	81586 (1) (24)	81243 (1) (24)	81541-15 (1)	81245 (1) (24)	81543-16 (1)	80793-09 (1)	12305-16 (1)	80857 (1) (24)	PAINT,BLACK,MEDIUM GLOSS	YES (2)	12220 (24)
12220-12								11301-01 (1)											

REVISION	ECN	ECN BY	DESCRIPTION
16	13456	JRS 12/29/99	.420-.430 WAS .435-.455
17	14382	JRS 2/11/00	DELETED SECTION B-B
18	15606	JRS 3/14/00	UPDATED DISPLAY
19	19584	GDC 02/11/03	UPDATED DISPLAY (ITEM 1) REVISED & RELOCATED BOM REVISED & RELOCATED FINISH RESTORED STD TOLERANCES
20	19645	TEB 4/15/03	ADDED STAKE DIM
21	19720	GDC 08/14/03	MOVED DATE CODE FROM PIVOT PLATE TO THE PIVOT. REVISED BOM. ADDED PART WEIGHT.
22	19765	GDC 09/30/03	UPDATED VIEWS
23	18562	RLO 3-11-09	UPDATED DRAWING FORMAT, VIEW (ITEM 8), PART MARK. ADDED PART NUMBER MARKING COLUMN, ASSY DOTS, EXPLODED VIEW.
24	38013	RLO 9-18-12	ADDED -01 VERSION. UPDATED PART MARK, PART NUMBER. ADDED ENVELOPE DIMENSIONS. BOM; REMOVED -00 TO AGREE WITH AS400M (6 PLACES).

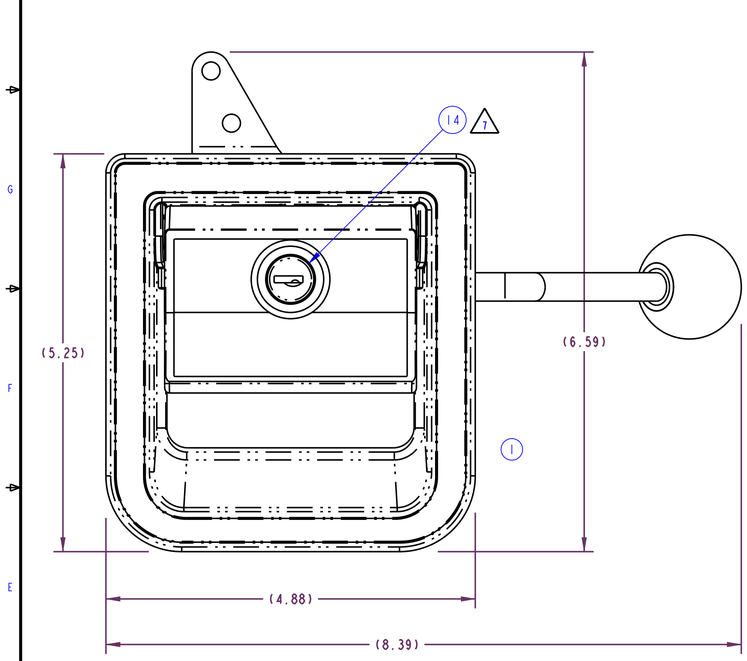

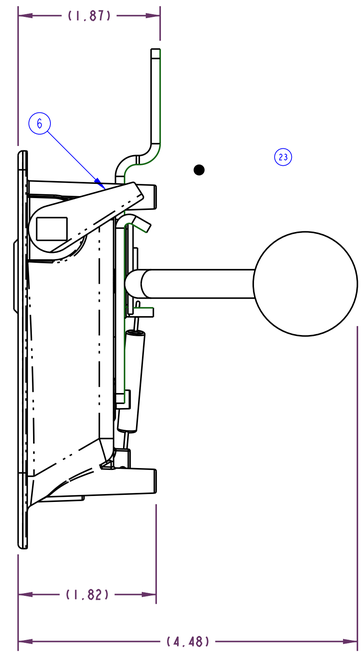

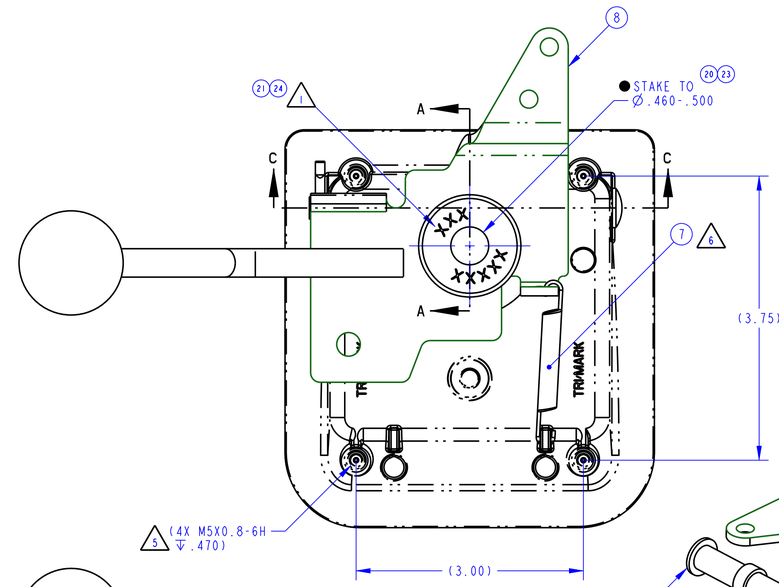

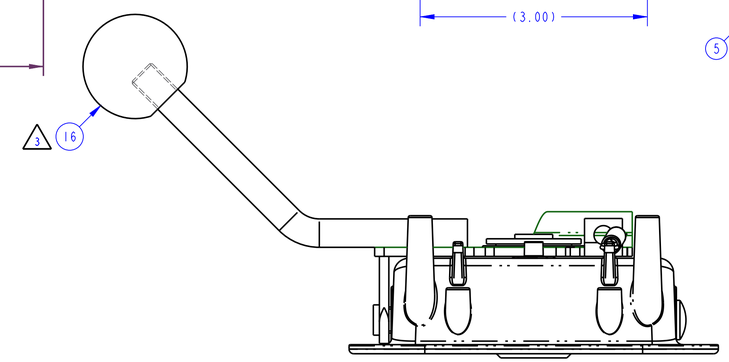

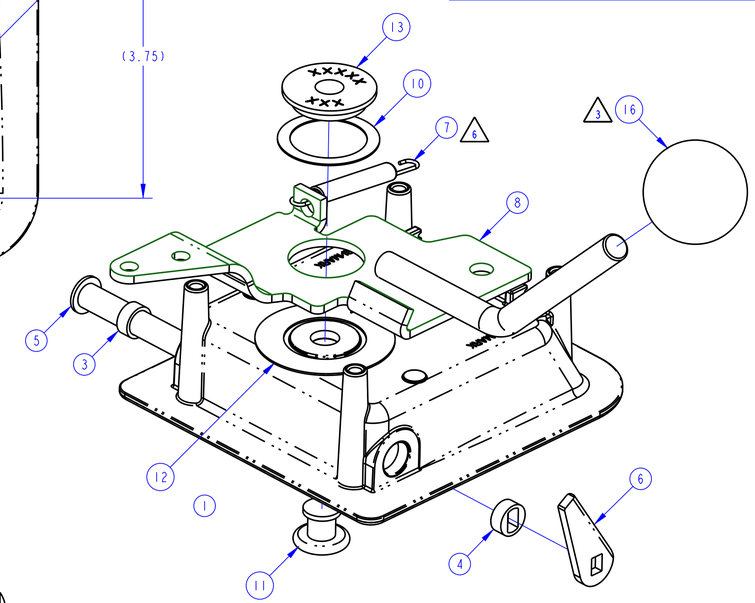

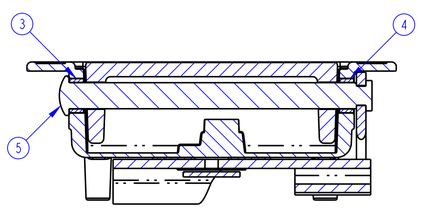

SECTION C-C

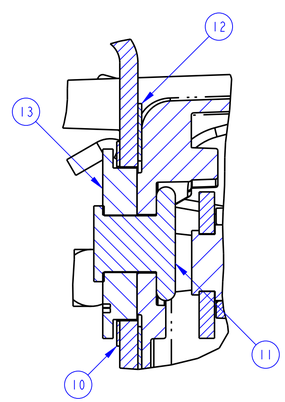

SECTION A-A
SCALE 2.00

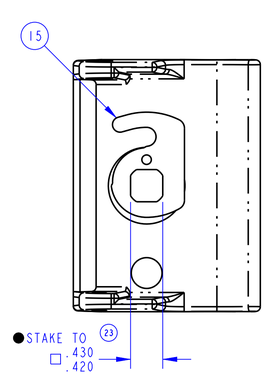

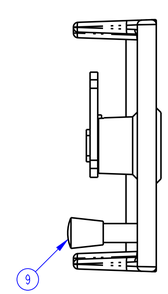

PADDLE ASSEMBLY DETAIL

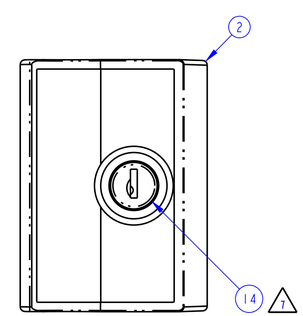

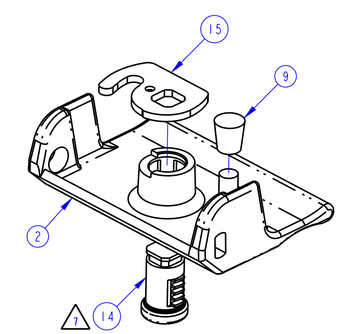

EXPLODED VIEW

NOTES: UNLESS OTHERWISE SPECIFIED;

(21) ●1. STAMP PIVOT (ITEM 13) WITH PART NUMBER AND DATE CODE PER ES-121. LOCATE APPROXIMATELY AS SHOWN. ORIENTATION IS NOT IMPORTANT.

2. PADDLE (ITEM 2) DOES NOT MOVE WHEN IN LOCKED POSITION.

●3. KNOB (ITEM 16) TO BE SCREWED ONTO HANDLE.

4. FINISH IS FOR REFERENCE ONLY.

5. TORQUE MOUNTING FASTENERS TO 7 FT-LB MAX.

●6. SPRING (ITEM 7) ORIENTATION IMPORTANT.

●7. LOCKCYLINDER (ITEM 14) TO BE ASSEMBLED IN UNLOCKED POSITION. SHIP ASSEMBLY WITH LOCKCYLINDER IN UNLOCKED POSITION AS SHOWN.

(23) ● INDICATES REQUIRED ASSEMBLY INFORMATION.
UOS: THE -00 VERSION SHALL BE THE UNFINISHED VERSION OF PART SHOWN.
UOS: ALL DIMENSIONS APPLY BEFORE COATING. (ASME Y14.5M, sec. 2.4.1)

TOLERANCES
UNLESS OTHERWISE SPECIFIED (UOS)
ASME Y14.5M-1994

INCH	MILLIMETER
X.X ±.1	X ±3
X.XX ±.03	X.X ±.8
X.XXX ±.010	X.XX ±.25

ANGLES
X° ±3°
X.X° ±1.0°
X.XX° ±.50° (19)

DO NOT SCALE DRAWING

REF. T/M QP 4.20-2 FOR SUP. QUALITY REQ.
REF. T/M QP 4.20-3 FOR INT. QUALITY REQ.

DRAWN BY	SLM	12/6/91
CHECKED BY	JGP	1/24/92
PROJECT	LA30250	
PRODUCT CODE	C06 (030-0250)	
CUSTOMER		
CUSTOMER PART NUMBER		
PART WEIGHT (21)	(2.18 LB)	
SURFACE AREA		

TriMark®
500 Bailey Avenue
P. O. Box 350
New Hampton, Iowa 50659 U.S.A.
Tel: 641-394-3188
Fax: 641-394-2392

This drawing and the information contained herein is the property of TriMark Corporation and shall not be used for any purpose without our written consent.

DESCRIPTION: ASSY,HSG/PDL,4.3,LH,CH751

SIZE	SCALE	PART NUMBER (24)
D	1.0	12220